3278 - Mini Stelvio FX T3 - wide beam street

Code: 330393-39

The range of street luminaires has been considerably expanded with the introduction of new fixtures with different light distributions to better meet urban lighting needs and to allow lighting designers to adjust to any setting.
Stelvio and Mini Stelvio represent the latest generation of streetlights, designed to fit new bulbs and modern lighting management and control systems.
The die-cast aluminium housing with aerodynamic profile is made to minimise wind resistance and features cooling fins to allow heat dissipation and optimal LED operation.
Stelvio and Mini Stelvio are also equipped with an anti-condensation valve and a control system that automatically reduces the current in the event of abnormal temperature rise.
These features ensure long service life.
The whole range includes dimming options. Moreover, there is a stand-alone system that reduces the luminous flux at night.
Each individual lighting fixture can be monitored via a sophisticated control, management and diagnostic system.
This is a system that can be operated remotely via power line carrier or wireless.
Stelvio and Mini Stelvio are products with a simple, linear design, with IP66 rating, in full compliance with lighting pollution standards and ENEC regulations.
Available in street, cycle and asymmetric optic versions. 350maA and 700mA power supply.
A controller is built into the luminaire to monitor the luminaires operating parameters.
The system also records data regarding the off-on times, the hours of LED use, and the total energy consumed by the system.
It is also possible to receive information regarding the supply voltage, current and power used, and the working temperature of the LEDs.
In the event of luminaire failures or anomalies, the system immediately sends the control station the data regarding the system and the luminaire that generated the failure.
It is possible to choose the driving current of the LEDs to ensure that the appropriate power is always available for any given design condition.

GENERAL INFORMATION

Article	3278 - Mini Stelvio FX T3 - wide beam street
Code	330393-39

DIMENSIONS AND WEIGHT

Length (mm)	727 mm
Width (mm)	280 mm
Height (mm)	177 mm
Weight (Kg)	8 kg

INSTALLATION

Diameter (Ø) of pole connector (mm)	46-76 mm
Surface exposed to wind (mm)	L 13900 mm², F 40000 mm²

ELECTRICAL CHARACTERISTICS AND CONTROLS

Voltage type	AC
Min Voltage (V)	220 V
Max Voltage (V)	240 V
Min Frequency (Hz)	50 Hz
Max Frequency (Hz)	60 Hz
Frequency (Hz)	50 Hz
Wiring name	CLD
Power factor	≥0.9
Rated Current	700 mA
Surge protector (common) (EN 61547)	6 kV, 10 kV
Insulation class	Class II
Controllability	None

Please contact the Consulting and Design Centre for any technical information. The reported luminous flux is the flux emitted by the light source with a tolerance of ± 10% compared to the indicated value. The total wattage absorbed by the system will not exceed 10% of the reported value. Technical lighting data may be subject to changes and improvements due to the fast evolution of the technology. Monday, October 5, 2026

3278 - Mini Stelvio FX T3 - wide beam street

Code: 330393-39

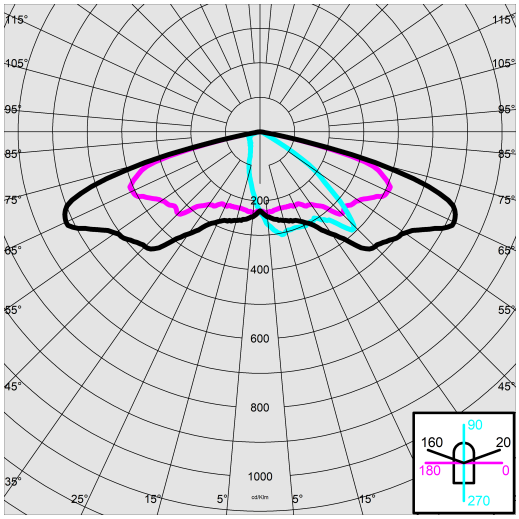

PHOTOMETRIC DATA

Distribution type	Medium / Comfort
Lighting source	LED
CRI	>70
Luminous flux (output) (lm)	15084 lm
Power absorption (total) (W)	100 W
CCT	3000 K
Luminous efficacy (lm/W)	151 lm/W
Low Flicker	luminaire with very low flicker: evenly distributed light for greater visual safety.
LED flux maintenance	100000 hr, L 80, B 10

MECHANICAL CHARACTERISTICS

Impact resistance rating (IK)	IK09
IP	66
Ambient temperature - min	-30 °C
Ambient temperature - max	40 °C

Please contact the Consulting and Design Centre for any technical information. The reported luminous flux is the flux emitted by the light source with a tolerance of ± 10% compared to the indicated value. The total wattage absorbed by the system will not exceed 10% of the reported value. Technical lighting data may be subject to changes and improvements due to the fast evolution of the technology. Monday, October 5, 2026

3278 - Mini Stelvio FX T3 - wide beam street

Code: 330393-39

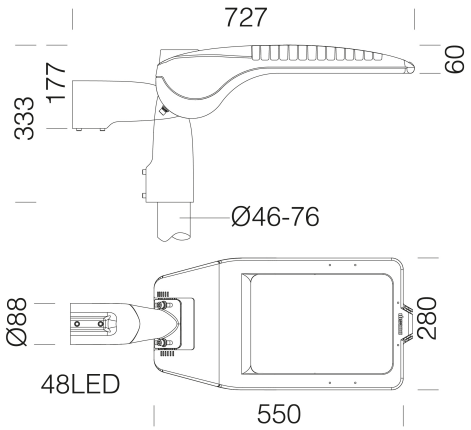

DOWNLOAD

MOUNTS

AssemblyInstructions ministelvio 03-25.pdf

DESIGNS

BIM 3278 04-26.zip

TechnicalDrawing ministelvio.dxf

MATERIALS AND COLOURS

Housing	in die-cast aluminium and designed with a very small surface exposed to wind. Cooling fins integrated in the cover.
Optics	in high-performance PMMA resistent to high temperatures and UV rays.
Diffuser	extra-clear, tempered glass, 4 mm thick, resistant to thermal shock and impact (UNI-EN 12150-1:2001).
Heat sink	the heat sink is designed and made to allow the LEDs to operate at temperatures capable of ensuring excellent performance/output and long service life.
Pole connection	in die-cast aluminium with clamps for fastening the fixture at different angles. Adjustable from 0° to 15° for hockey stick attachment; and from 0° to 10° for mast-top attachment. Tilt pitch 5°. Suitable for 46-76 mm diameter poles.
Coating	the fully automated powder-coating cycle involves a polyester-based, salt-spray corrosion-resistant and UV-stabilised paint., Anthracite = RAL 7021
Special coating (UPON REQUEST)	Upon request: protective coating recommended for marine environments within 5 km (3 miles) of the sea.
Colour	Anthracite
Equipment	- selector switch. - waterproof connector for quick installation with no need to open the fixture. - anti-condensation valve. - temperature controller with auto-reset. - EN 61547 compliant surge protection. - CLD PROG built-in functions.

EMERGENCY LIGHTING

Emergency power supply type	Not present

STANDARDS AND COMPLIANCE

Photobiological safety class	RG0 Ethr
Markings and tests	CE, ENEC
Reference standards	EN60598-1. They have a degree of protection according to the EN60529 standard.
Laboratory Tests	compliant with third-party certified vibration tests pursuant to ANSI C136.31: Street Lighting - Luminaire Vibration. Test level: 3.0G Level 2 for bridge/overpass applications.
Energy Label	D

GEAR

Upon request	- protection of up to 10KV. 1-10V dimmable power supply, subcode 12 - virtual midnight device, subcode 30 - power line carrier, subcode 0078 - Nema Socket, subcode 40 - Zhaga Socket, subcode 0054

WARRANTY

After sales warranty	5 yr

Please contact the Consulting and Design Centre for any technical information. The reported luminous flux is the flux emitted by the light source with a tolerance of ± 10% compared to the indicated value. The total wattage absorbed by the system will not exceed 10% of the reported value. Technical lighting data may be subject to changes and improvements due to the fast evolution of the technology. Monday, October 5, 2026

3278 - Mini Stelvio FX T3 - wide beam street

Code: 330393-39

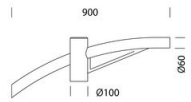

504 Single arm

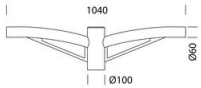

508 Double arm

1493 Pole with base

1477 Urban Pole - with base

1478 Urban Pole to be buried

1508 Fluted pole ø 120 with base

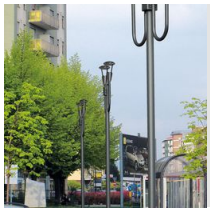

1491 Pole to be buried

1509 Fluted pole ø 120

Please contact the Consulting and Design Centre for any technical information. The reported luminous flux is the flux emitted by the light source with a tolerance of ± 10% compared to the indicated value. The total wattage absorbed by the system will not exceed 10% of the reported value. Technical lighting data may be subject to changes and improvements due to the fast evolution of the technology. Monday, October 5, 2026